SMT940D

High Performance Infrared TOP IR LED

SMT940D consists of a AlGaAs LED mounted on the lead frame as TOP LED package with plastic ball lens. It is 20mW typical of power and 13mW/sr of radiant intensity. It emits a spectral band of radiation at 850nm.

Outer Dimension (Unit:mm)

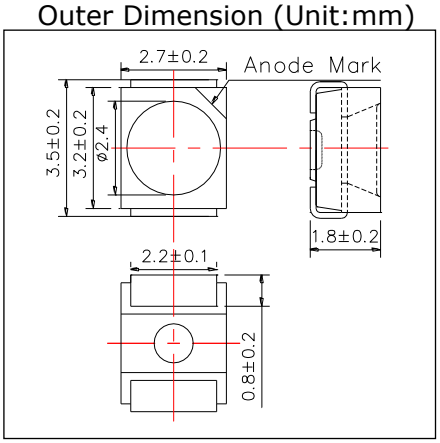

<Specifications>

1. Product Name: TOP IR LED
2. Type Number: SMT940D
3. Chip:
   - Chip Material: AlGaAs
   - Dimension: 350um x 350um
   - Peak Wavelength: 940nm
4. Package
   - Lead Frame Die: Silver Plated
   - Package Resin: PPA Resin
   - Lens: Epoxy Resin

Absolute Maximum Ratings[Ta=25℃]			
Item	Symbol	Maximum Rated Value	Unit
Power Dissipation	PD	170	mW
Forward Current	IF	100	mA
Pulse Forward Current*	IFP	1000	mA
Reverse Voltage	VR	5	V
Thermal Resistance	Rthja	200	K/W
Junction Temperature	Tj	100	℃
Operating Temperature	TOPR	-40 ~ +80	℃
Storage Temperature	TSTG	-40 ~ +80	℃
Soldering Temperature**	TSOL	250	℃

* Duty=1% and Pulse Width=10us.
**Soldering condition must be completed within 5 second at 250 ℃.

Electro-Optical Characteristics [Ta=25℃]						
Item	Symbol	Condition	Minimum	Typical	Maximum	Unit
Forward Voltage	VF	IF=50mA		1.50	1.70	V
Reverse Current	IR	VR=5V			-	uA
Total Radiated Power*	PO	IF=50mA	16	20		mW
Radiant Intensity**	IE	IF=50mA		13		mW/sr
Peak wavelength	λP	IF=50mA	930	940	950	nm
Half Width	Δλ	IF=50mA		37		nm
Viewing Half Angle	θ1/2	IF=50mA		±61		deg
Rise Time	tr	IF=50mA		25		ns
Fall Time	tf	IF=50mA		25		ns

* Measured by S3584-08
** Measured by Tektronix J-6512

RoHS Compliant

Forward Curent - Forward Voltage

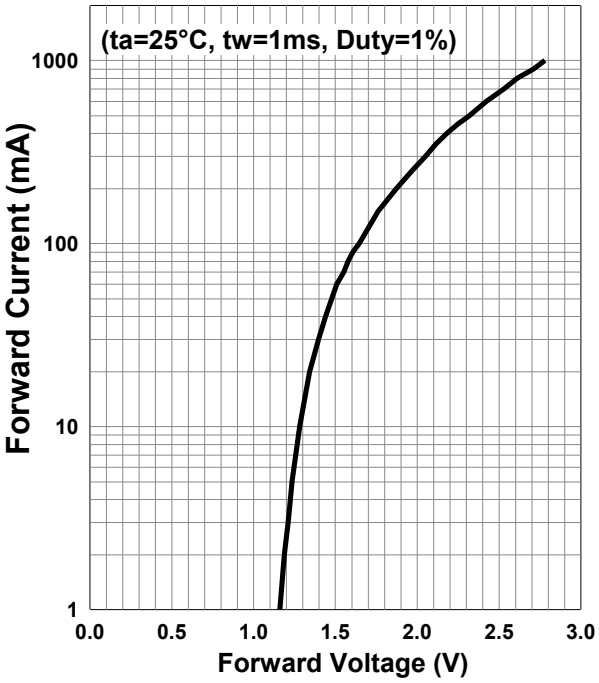

Relative Radiant Intensity - Forward Current

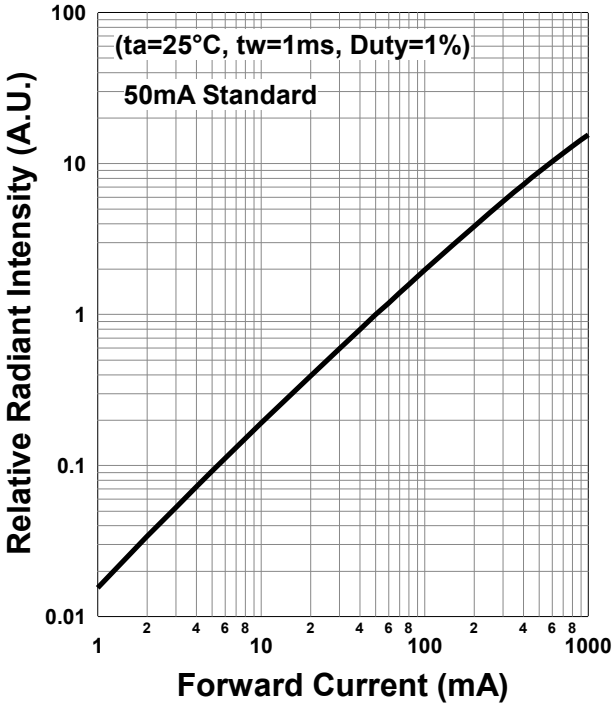

Forward Current - Pulse Duration

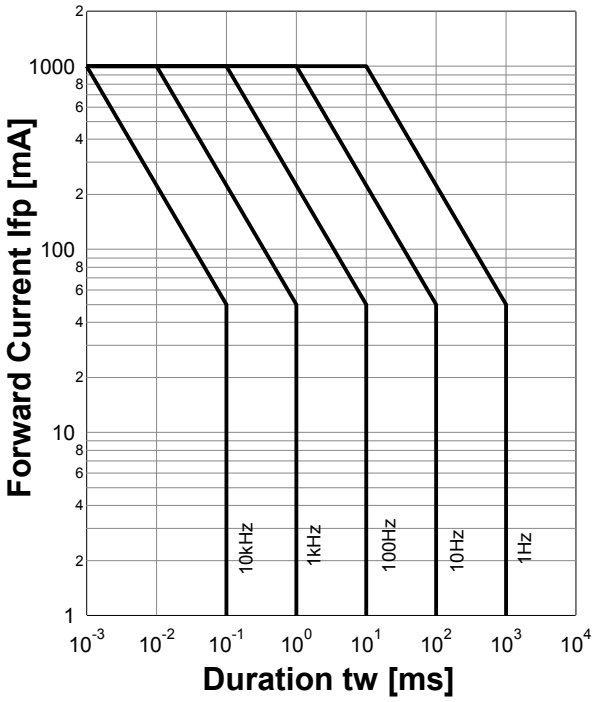

Allowable Forward Current - Ambient Temperature

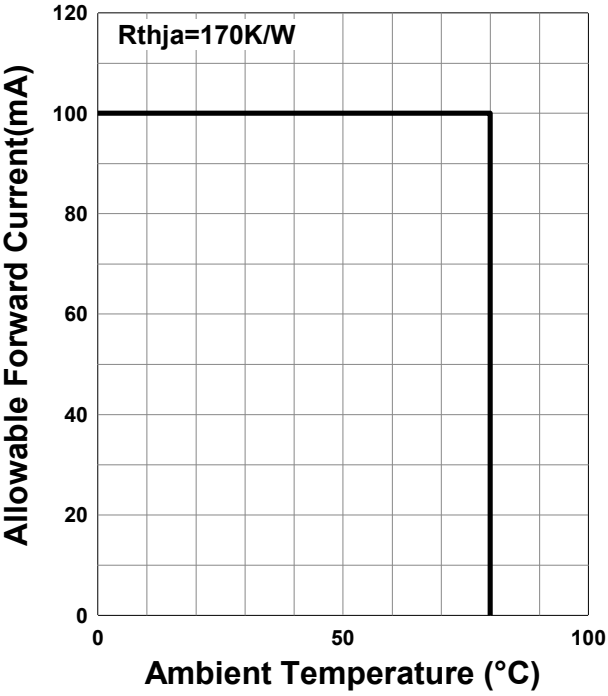

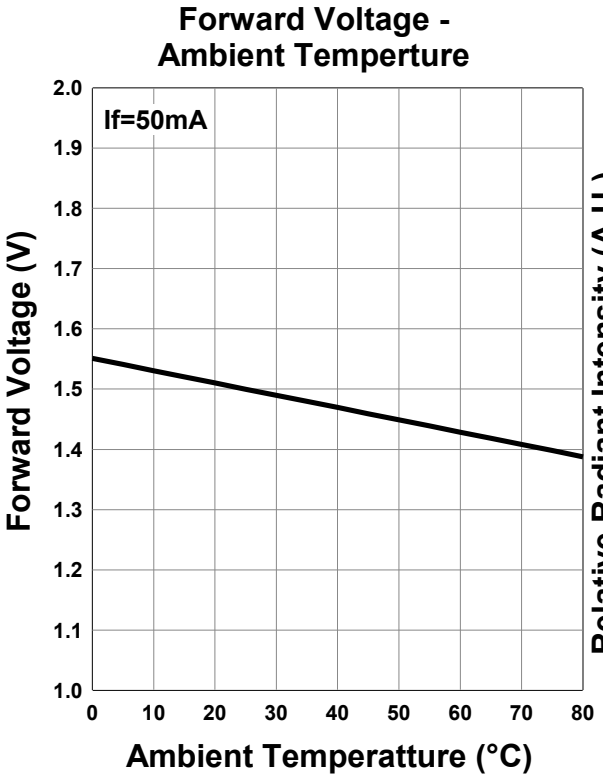
Forward Voltage -
Ambient Temperture
If=50mA
Forward Voltage (V)
2.0
1.9
1.8
1.7
1.6
1.5
1.4
1.3
1.2
1.1
1.0
0
10
20
30
40
50
60
70
80
Ambient Temperatture (°C)

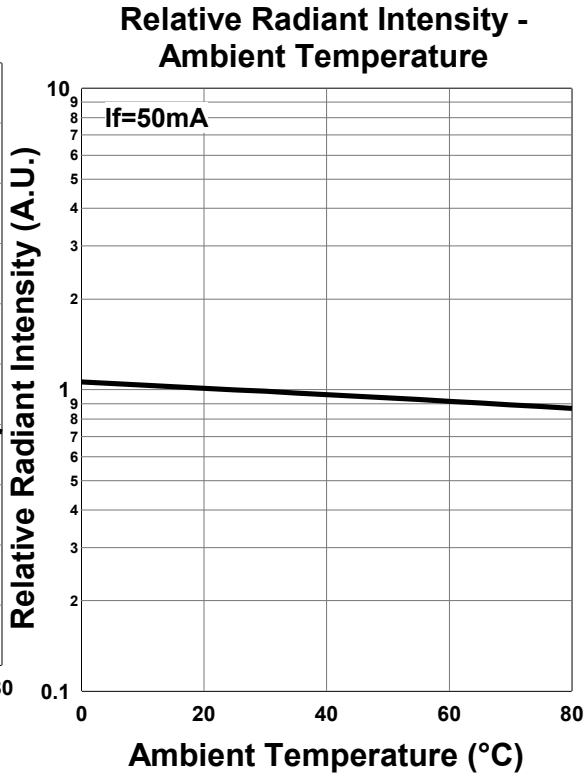
Relative Radiant Intensity -
Ambient Temperature
If=50mA
Relative Radiant Intensity (A.U.)
10
1
0.1
0
20
40
60
80
Ambient Temperature (°C)

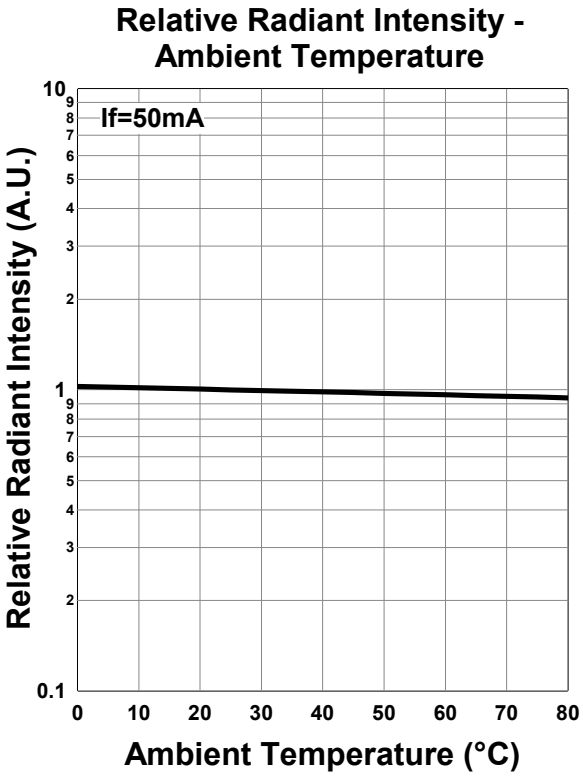
Relative Radiant Intensity -
Ambient Temperature
If=50mA
Relative Radiant Intensity (A.U.)
10
1
0.1
0
10
20
30
40
50
60
70
80
Ambient Temperature (°C)

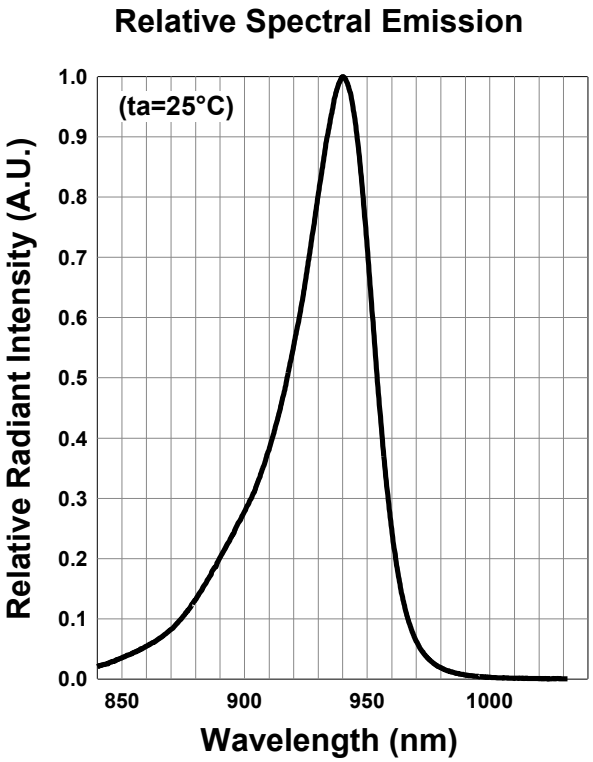
Relative Spectral Emission
(ta=25°C)
Relative Radiant Intensity (A.U.)
1.0
0.9
0.8
0.7
0.6
0.5
0.4
0.3
0.2
0.1
0.0
850
900
950
1000
Wavelength (nm)

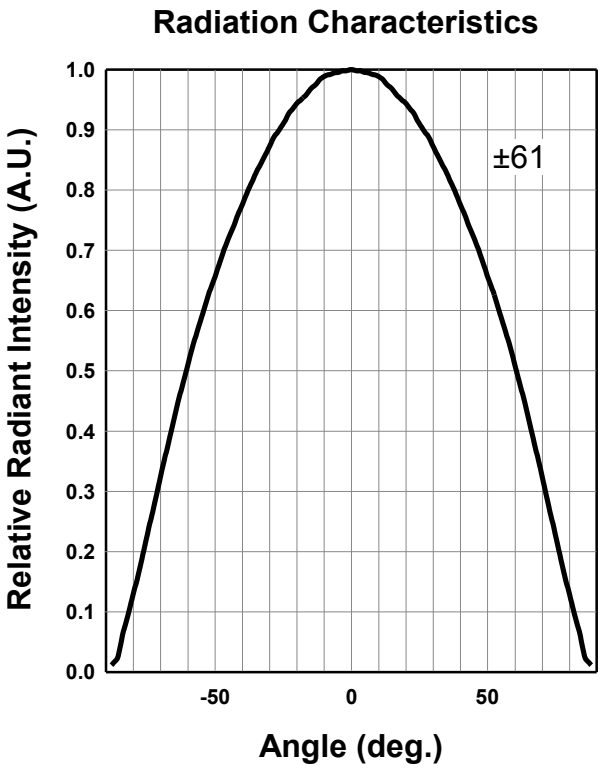
Radiation Characteristics
±61
Relative Radiant Intensity (A.U.)
1.0
0.9
0.8
0.7
0.6
0.5
0.4
0.3
0.2
0.1
0.0
-50
0
50
Angle (deg.)

♦ SMD Application

IR-Reflow Soldering Profile for lead free soldering

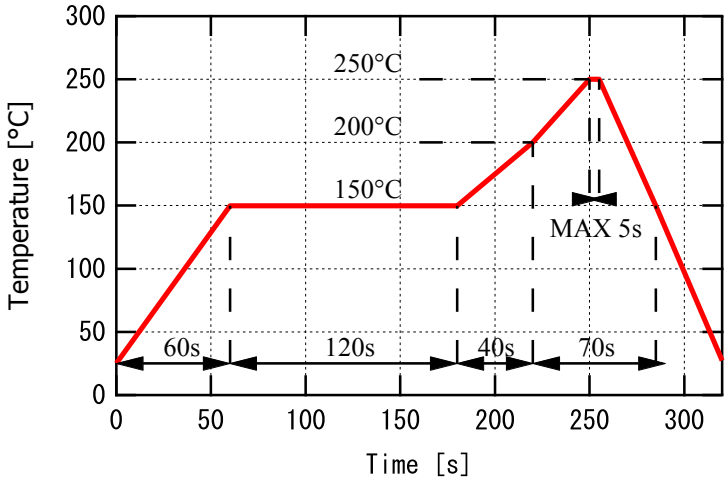

♦ Recomended Lnd Layout (Unit : mm)

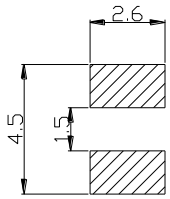

♦ SMD Packing

Tape and Reel Dimensions (Unit: mm)

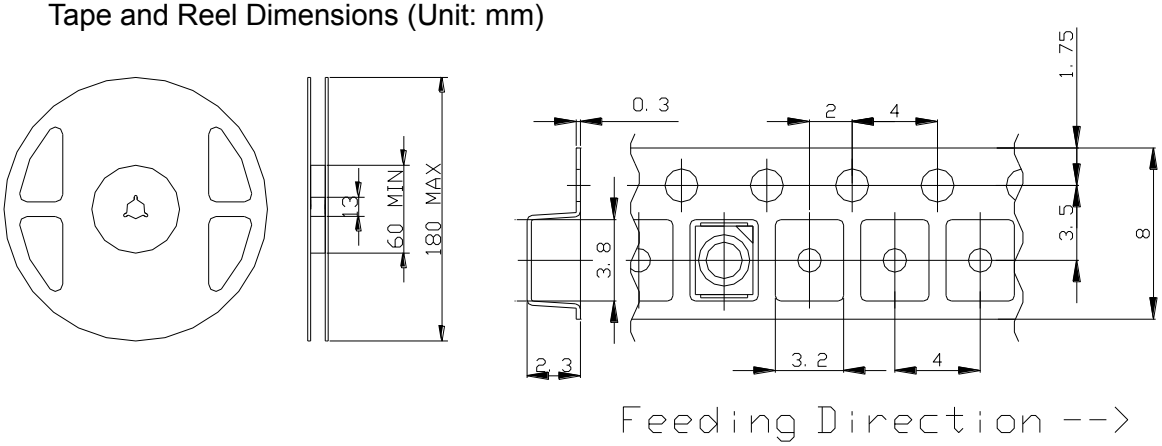

♦ Wrapping

Moisture barrier bag aluminum laminated film with a desiccant to keep out the moisture absorption during the transportation and storage.

Disclaimer

Product specifications and data shown in this product catalog are subject to change without notice for the purposes of improving product performance, reliability, design, or otherwise.

Product data and parameters in this catalog are typical values based on reasonably up-to-date measurements. Product data and parameters may vary by user application and over time.

Products shown in this catalog are intended to be used for general electronic equipment. Products are not guaranteed for applications where product malfunction or failure may cause personal injury or death, including but not limited to life-supporting / saving devices, medical devices, safety devices, airplanes, aerospace equipment, automobiles, traffic control systems, and nuclear reactor control systems.

2013.05

Marubeni America Corporation | 3945 Freedom Circle, Suite 1000, Santa Clara, CA95054
Email: sales@tech-led.com | URL: www.tech-led.com