Marubeni

L405-30M32L Higher beam type UVLED

L405-30M32L is an InGaN LED mounted on TO-18 stem and designed for narrow viewing angle +/-5° typ. with hermetical glass ball lens can. On forward bias it emits a spectral band of radiation, which peaks at 405nm.

♦Features

1) Narrow viewing angle
2) High Radiant Intensity
3) High Reliability

♦Specifications

1) Product Name	LED Lamp
2) Type No.	L405-30M32L
3) Chip Spec.	
(1) Material	InGaN
(2) Peak Wavelength	405nm
4) Package	
(1) Type	TO-18 stem
(2) Lens	Ball Glass Lens
(3) Cap	Gold plated

♦Outer dimension (Unit: mm)

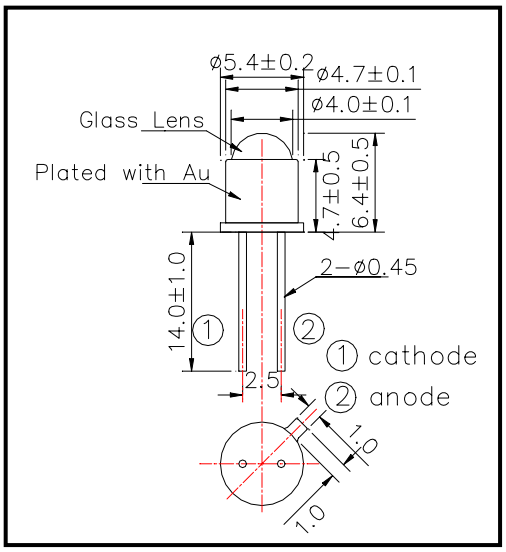

♦Absolute Maximum Ratings

Item	Symbol	Maximum Rated Value	Unit	Ambient Temperature
Power Dissipation	PD	120	mW	Ta=25°C
Forward Current	IF	30	mA	Ta=25°C
Pulse Forward Current	IFP	50	mA	Ta=25°C
Reverse Voltage	VR	5	V	Ta=25°C
Operating Temperature	TOPR	-30 ~ +85	°C	
Storage Temperature	TSTG	-30 ~ +100	°C	
Soldering Temperature	TSOL	260	°C	

‡Pulse Forward Current condition: Duty=1% and Pulse Width=10us.
‡Soldering condition: Soldering condition must be completed within 3 seconds at 260°C

♦Electro-Optical Characteristics

Item	Symbol	Condition	Minimum	Typical	Maximum	Unit
Forward Voltage	VF	IF=20mA		3.3	4.0	V
Reverse Current	IR	VR=5V			10	uA
Total Radiated Power	PO	IF=20mA		2.8		mW
Radiant Intensity	IE	IF=20mA		40		mW/sr
Brightness	IV	IF=20mA		-		mcd
Peak Wavelength	λP	IF=20mA	400	405	410	nm
Half Width	Δλ	IF=20mA		15		nm
Viewing Half Angle	θ 1/2	IF=20mA		±5		°

‡Total Radiated Power is measured by Ando Optical Multi Meter AQ2140 & AQ2741.
‡Ando Optical Multi Meter AQ2140 is setted at 405nm range.
‡Radiant Intensity is measured by Epitex's designed and AQ2140 & AQ2741

Marubeni America Corporation

3945 Freedom Circle, Suite 1000, Santa Clara, CA 95054

408-330-0650 (Ext. 323), 408-330-0655 (Fax), sales@tech-led.com